ITEM NO.	QTY.	PART NO.	DESCRIPTION
1	1	010316	1.250" EXTERNAL SNAP RING ZP
2	1	011532	1.24"DIA.x2.88" LOWER ARM PIN (TUCKUNDER)
3	1	013050	ZINC PLATED 10GA.x1.88x3.38" PIN CLIP (TUCKUNDER)
4	1	000606	5/16-18 USS CROWN LOCK NUT
5	1	010502	5/16-18X1" HHCS GRADE 5 BOLT
6	1	012810	ZINC PLATED PIN CLIP (TUCKUNDER)

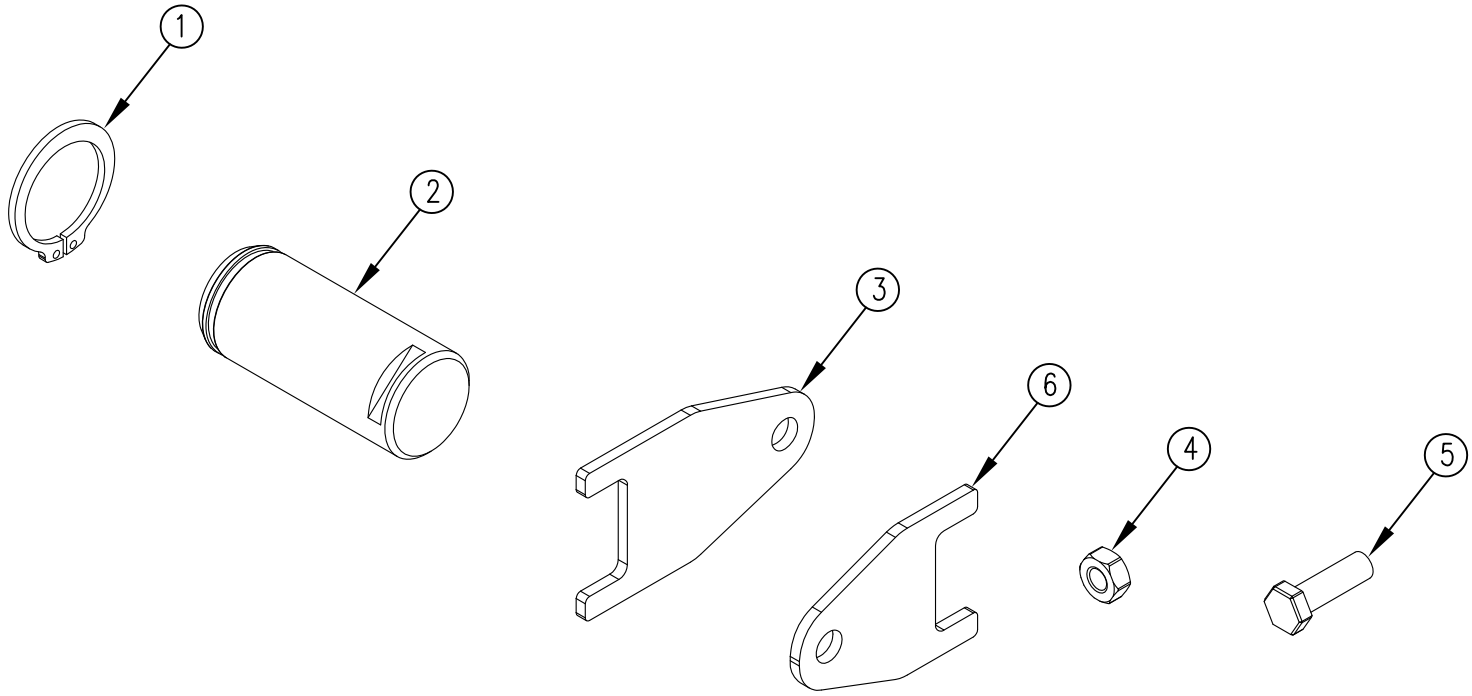

REV.	DATE	CHANGE RECORD	BY	APPVD	ECN
A.1	9/29/15	ITEM #3 BOM TYPO CORRECTED	JCB		
A	3/10/14	RELEASED TO PRODUCTION	JCB		1075

THIRD ANGLE PROJECTION

DECIMAL	2PLC	3PLC
MACHINE SAW,DRILL	.030	.015
SHEAR, PUNCH FORM	.060	.030
TORCH, WELDING ROUGH CAST	.090	.060
DRAFT 2°	ANGULAR ±1°	

FILENAME:

SYMBOLOGY PER ANSI Y14.5

DRAWN BY. JCB

DRAWN/DATE 3/10/14

APPVD/DATE

SALES CATEGORY

NOTES:

WOODBINE MFG. CO.
BUS BROWN DRIVE
WOODBINE, IOWA 51579
712-647-2050

The original TOMMY GATE hydraulic lift

THE INFORMATION HERE IS CONFIDENTIAL AND MUST NOT BE USED IN ANYWAY DETRIMENTAL TO THE INTEREST OF WOODBINE MFG.

TITLE REPL. 1-1/4" LIFT ARM PIN W/ KEEPER

PRODUCT LINE	SCALE	FIN. WT.	PART NO.
	1:2		12934