ITEM NO.	QTY.	PART NO.	DESCRIPTION
1	1	011501	LOWER ARM LINK (TUCKUNDER)
2	4	000521	1/2–13x1–1/4" HHCS GR5
3	4	000588	1/2–13 CROWN LOCK NUT
4	2	003065	1/2" HEYCO PLUG
5	1	009132*	IOWA STATE MAP DECAL
6	1	013484	LOGO – SM "ORIGINAL TOMMY GATE" DECAL

*DO NOT INCLUDE IN ACCOUNTING BOM

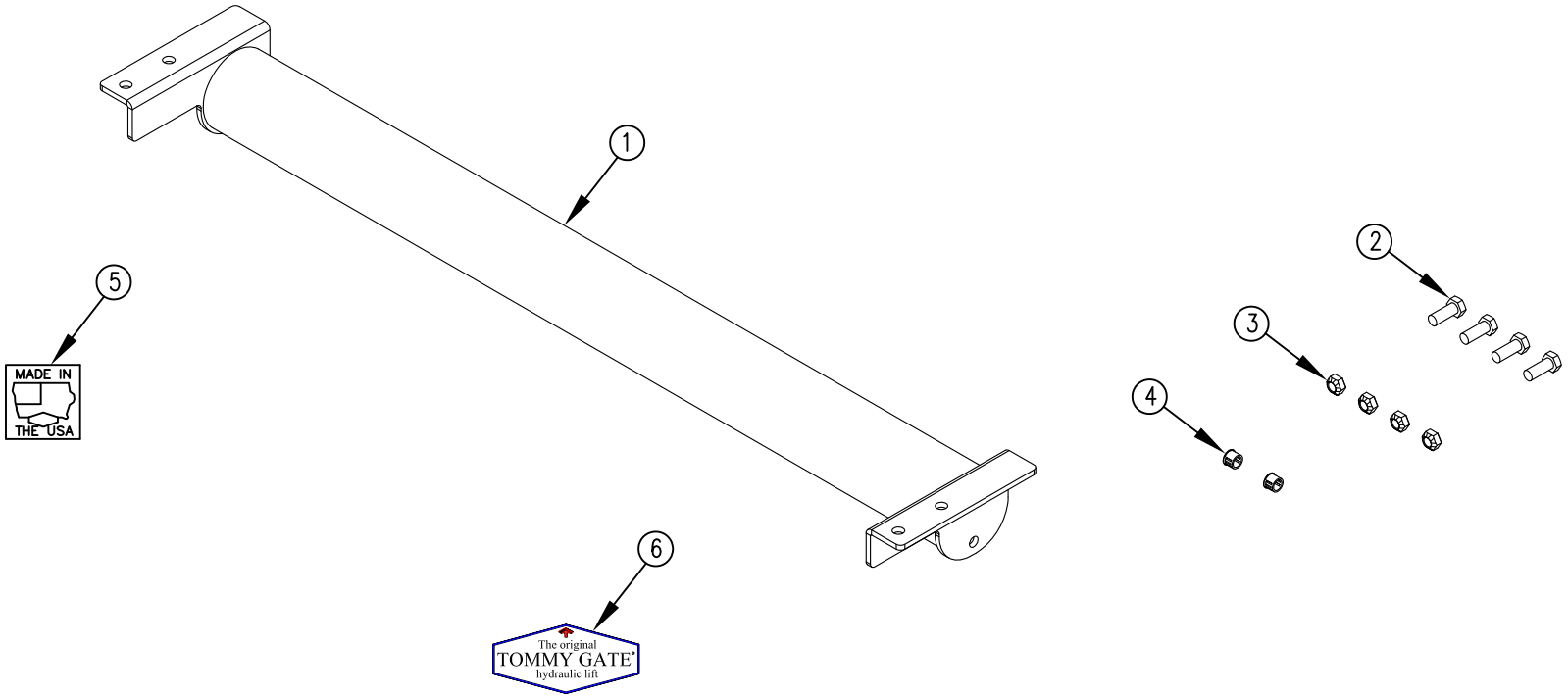

REV.	DATE	CHANGE RECORD	BY	APPVD	ECN
A	3/14/14	RELEASED TO PRODUCTION	JCB		1075

THIRD ANGLE PROJECTION

DECIMAL	2PLC	3PLC
MACHINE SAW,DRILL	.030	.015
SHEAR, PUNCH FORM	.060	.030
TORCH, WELDING ROUGH CAST	.090	.060

DRAFT 2° | ANGULAR ±1°

FILENAME:

SYMBOLOGY PER ANSI Y14.5

DRAWN BY. JCB

DRAWN/DATE 3/14/14

APPVD/DATE

NOTES:

WOODBINE MFG. CO.
BUS BROWN DRIVE
WOODBINE, IOWA 51579
712–647–2050

THE INFORMATION HERE IS CONFIDENTIAL AND MUST NOT BE USED IN ANYWAY DETRIMENTAL TO THE INTEREST OF WOODBINE MFG.

TITLE REPLACEMENT LOWER ARM LINK (TUCKUNDER)

SALES CATEGORY | PRODUCT LINE | SCALE 1:8 | FIN. WT. | PART NO. 12930