ITEM NO.	QTY.	PART NO.	DESCRIPTION
1	1	2626	G2 CHAIN W/ CLOTH CHAIN COVER
2	1	7637	0.5"DIAX1.079" EA PLAT CHAIN PIN (34-40)
3	2	614	1/2"EXTERNAL SNAP RING

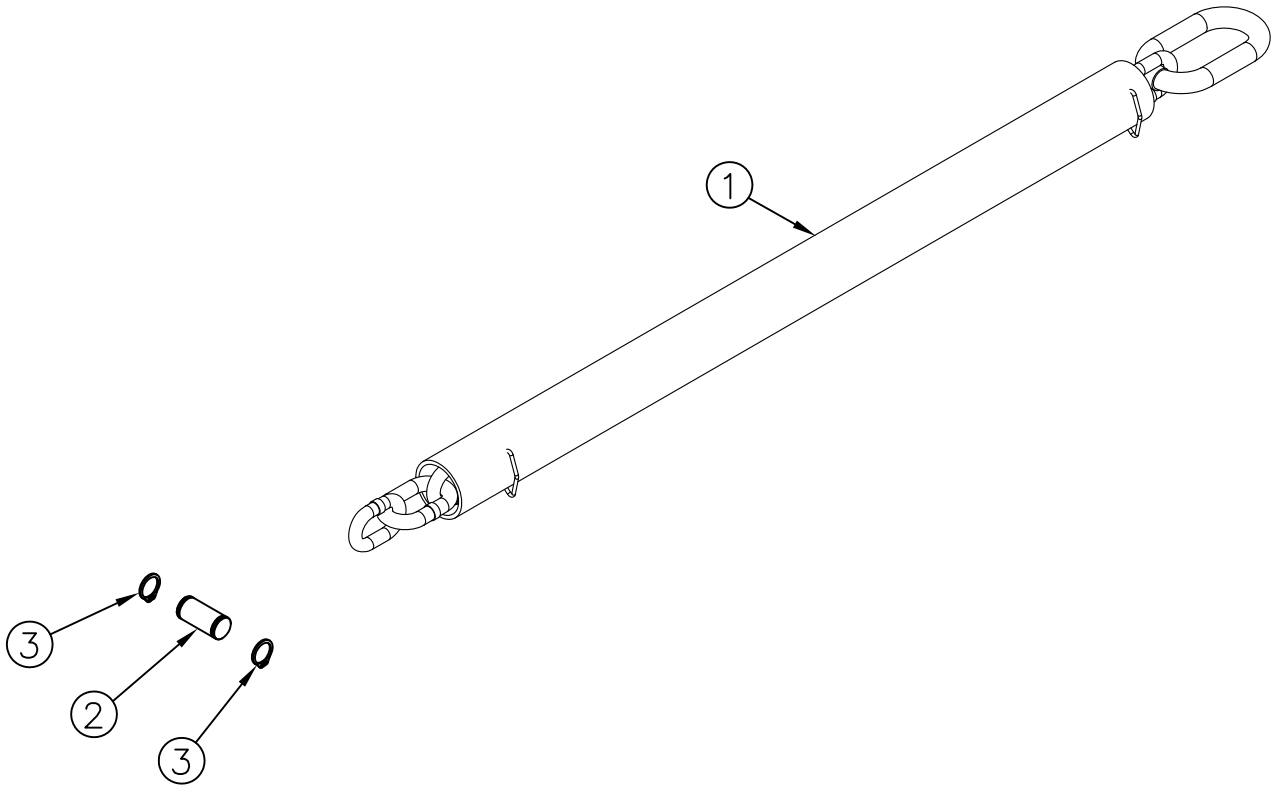

REV.	DATE	CHANGE RECORD	BY	APPVD	ECN
A	6/21/12	RELEASED TO PRODUCTION	JCB		675

THIRD ANGLE PROJECTION

DECIMAL	2PLC	3PLC
MACHINE SAW,DRILL	.030	.015
SHEAR, PUNCH FORM	.060	.030
TORCH, WELDING ROUGH CAST	.090	.060

DRAFT 2° | ANGULAR ±1°

FILENAME:

SYMBOLOGY PER ANSI Y14.5

DRAWN BY. JCB

DRAWN/DATE 6/21/12

APPVD/DATE

NOTES:

WOODBINE MFG. CO.
BUS BROWN DRIVE
WOODBINE, IOWA 51579
712-647-2050
The original TOMMY GATE® hydraulic lift

THE INFORMATION HERE IS CONFIDENTIAL AND MUST NOT BE USED IN ANYWAY DETRIMENTAL TO THE INTEREST OF WOODBINE MFG.

TITLE
REPLACEMENT G2 EA PLATFORM CHAIN (24 LINKS)

SALES CATEGORY	PRODUCT LINE	SCALE	FIN. WT.	PART NO.
		1:4		6473