ITEM NO.	QTY.	PART NO.	DESCRIPTION
1	1	004681	4GA. 2 WIRE ELECTRIC CABLE W/LUGS-26FT
2	4	004698	COPPER LUG-4GA 3/8" EYE

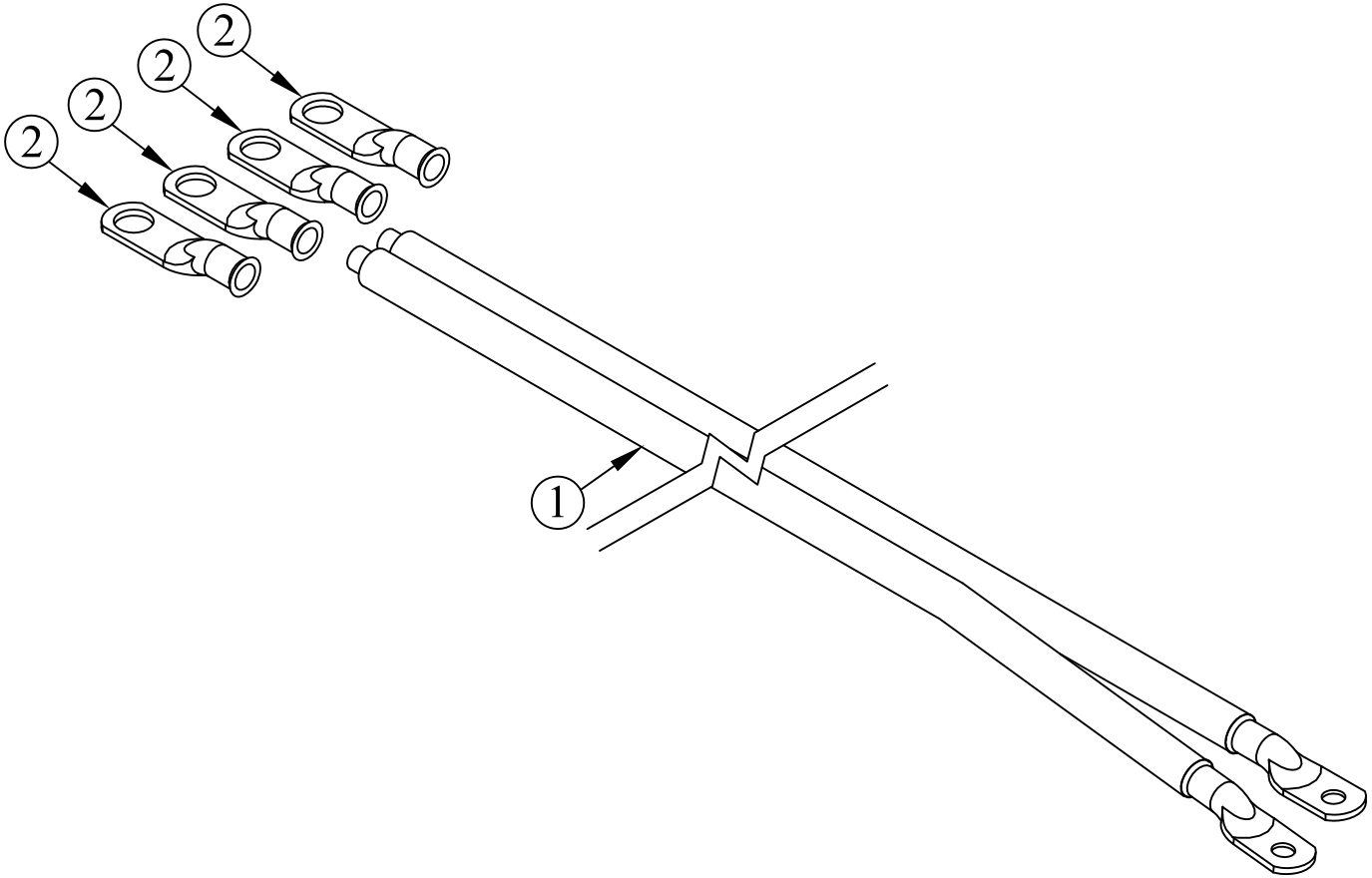

REV.	DATE	CHANGE RECORD	BY	APPVD	ECN
A	8/7/06	DRAWN IN AUTOCAD	JCB	KGJ	

THIRD ANGLE PROJECTION

DECIMAL	2PLC	3PLC
MACHINE SAW,DRILL	.030	.015
SHEAR, PUNCH FORM	.060	.030
TORCH, WELDING ROUGH CAST	.090	.060

DRAFT 2° | ANGULAR ±1°

FILENAME:

SYMBOLOGY PER ANSI Y14.5

DRAWN BY. DJR

DRAWN/DATE 12/23/03

APPVD/DATE 8/7/06

NOTES:

WOODBINE MFG. CO.
BUS BROWN DRIVE
WOODBINE, IOWA 51579
712-647-2050
The original TOMMY GATE® hydraulic lift

THE INFORMATION HERE IS CONFIDENTIAL AND MUST NOT BE USED IN ANYWAY DETRIMENTAL TO THE INTEREST OF WOODBINE MFG.

TITLE REPLACEMENT 4GA. 2 WIRE ELECTRIC CABLE W/LUGS-26FT

SALES CATEGORY	PRODUCT LINE	SCALE	FIN. WT.	PART NO.
65	8950	N		4570