| ITEM NO. | QTY. | PART NO. | DESCRIPTION |
|---|---|---|---|
| 1 | 1 | 002295 | SPROCKET PIN WLDMT |
| 2 | 4 | 000622 | 3/4"IDx1-1/4"OD FLATWASHER(650)*ZP* |
| 3 | 1 | 007647 | #50C19-1" SPROCKET WITH BUSHING |
| 4 | 1 | 000507 | 3/8-16x1/2"HHCS GR5 |
| 5 | 1 | 000572 | 3/8" SPRING LOCK WASHER |
| 6 | 2 | 009967 | 1/16"x1/2" COTTER PIN |

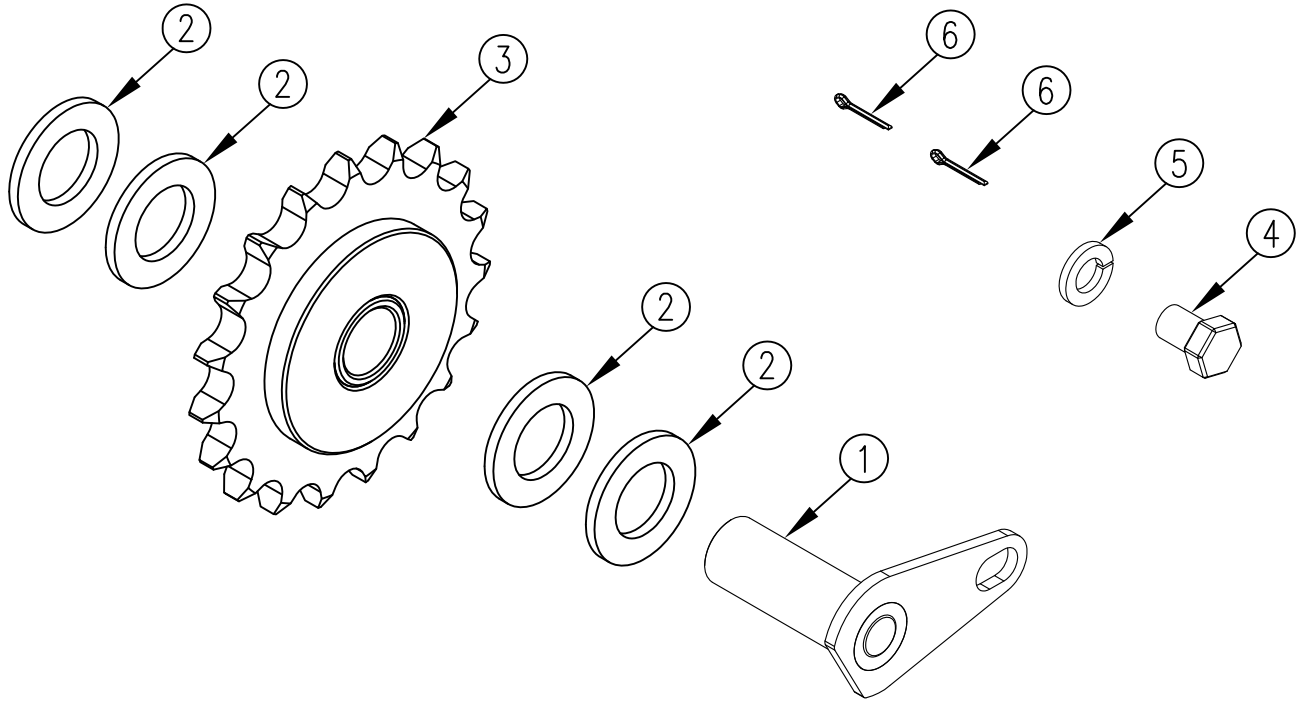


| REV. | DATE | CHANGE RECORD | BY | APPVD | ECN |
|---|---|---|---|---|---|
| B | 8/15/07 | REDESIGNED KEEPER | JCB | KGJ | |
| C | 5/5/08 | ADDED 9967 | JCB | KGJ | |

THIRD ANGLE PROJECTION

| DECIMAL | 2PLC | 3PLC |
|---|---|---|
| MACHINE SAW,DRILL | .030 | .015 |
| SHEAR, PUNCH FORM | .060 | .030 |
| TORCH, WELDING ROUGH CAST | .090 | .060 |

DRAFT 2° | ANGULAR ±1°

FILENAME:

SYMBOLOGY PER ANSI Y14.5

DRAWN BY. DJR

DRAWN/DATE 7/9/03

APPVD/DATE 5/5/08

NOTES:

WOODBINE MFG. CO.
BUS BROWN DRIVE
WOODBINE, IOWA 51579
712-647-2050
The original TOMMY GATE® hydraulic lift

THE INFORMATION HERE IS CONFIDENTIAL AND MUST NOT BE USED IN ANYWAY DETRIMENTAL TO THE INTEREST OF WOODBINE MFG.

TITLE 19-TOOTH REPAIR SPROCKET

| SALES CATEGORY | PRODUCT LINE | SCALE | FIN. WT. | PART NO. |
|---|---|---|---|---|
| 45 | 8950 | 1:2 | | 4188 |