ITEM NO.	QTY.	PART NO.	DESCRIPTION
1	1	2066	(80) 42+6" TREADPLATE PLATFORM COMPLETE
2	1	5814	1/2" TORSION SPRING(80)
3	2	4727	3/8"U-BOLT(SHORT)x16x7/8x1-1/2
4	4	605	3/8-16 USS CROWN LOCK NUT
5	4	550	3/8-16 GR5 HEX NUT
6	2	587	1/2-13x1" HHCS GR5
7	1	551	1/2-13 GR5 HEX NUT (ZINC)
8	1	7433	DRIVER'S SIDE SQ SPRING HOLDER
9	1	7435	PASS SIDE SQ SPRING HOLDER(80-92)
10	2	573	1/2" SPRING LOCKWASHER
11	1	9513	DECAL SHEET - CABLE/G2 W/WEIGHT CAP.
12	2	9540*	CAUTION DECAL - SPRING TENSION
13	1	95064	PLAT. AND/OR TORSION SPRING INSTRUCTIONS

*DO NOT INCLUDE IN ACCOUNTING BOM

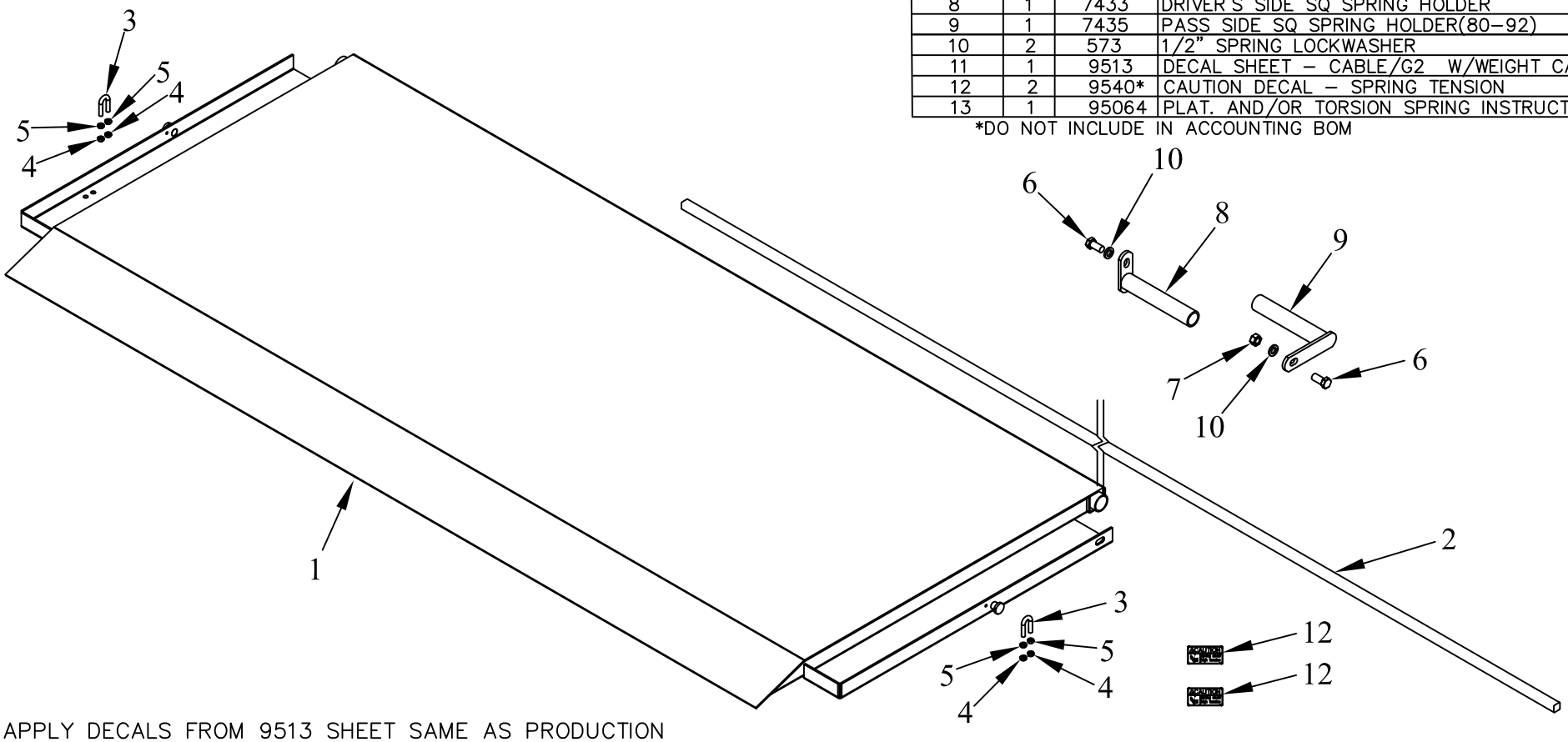

NOTES: APPLY DECALS FROM 9513 SHEET SAME AS PRODUCTION
SEND (2) 9540 LOOSE

REV.	DATE	CHANGE RECORD	BY	APPVD	ECN
D	1/24/17	ADDED 9513, 9540, 95064	AAS		1783
C	4/24/14	CHANGED PN7434 TO PN7435	MTC		1001
B	3/12/10	REMOVED PN8117; ADDED PN5814, 587, 551, 7433, 7434, 573	MTC		274
A	5/22/06	UPDATED BOM	JCB	KGJ	

THIRD ANGLE PROJECTION

DECIMAL	2PLC	3PLC
MACHINE SAW,DRILL	.030	.015
SHEAR, PUNCH FORM	.060	.030
TORCH, WELDING ROUGH CAST	.090	.060

DRAFT 2° | ANGULAR ±1°

FILENAME:

SYMBOLOGY PER ANSI Y14.5

DRAWN BY. DJR

DRAWN/DATE 3/15/05

NOTES:

WOODBINE MFG. CO.
BUS BROWN DRIVE
WOODBINE, IOWA 51579

The original TOMMY GATE hydraulic lift

THE INFORMATION HERE IS CONFIDENTIAL AND MUST NOT BE USED IN ANYWAY DETRIMENTAL TO THE INTEREST OF WOODBINE MFG.

TITLE (80) 42+6" TP REPLACEMENT PLATFORM

SCALE N | FIN. WT. 322 | PART NO. 1787